PRODUCT DATA SHEET

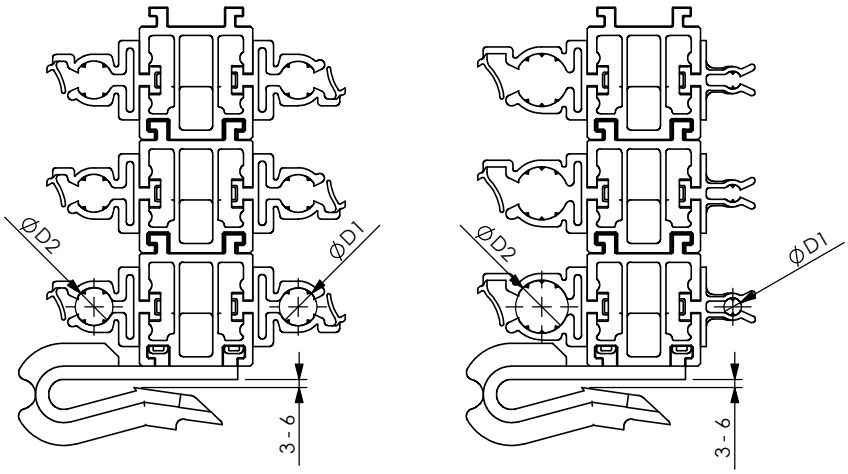

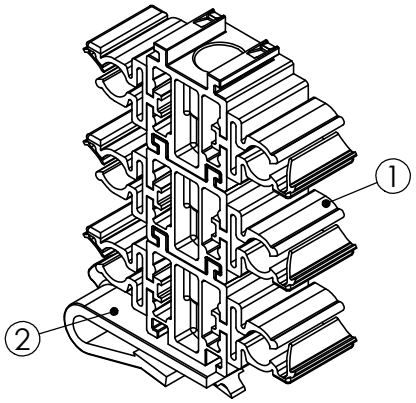

A) SPECIFICATIONS

1 *No-tools stackable double saddle P.A. U.V. resistant (-30 +120°C)*

2 *EMP 3 Snap in clamp P.A. U.V. resistant*

B) RESISTANCE TESTS

Operating temperature: -30 +120°C
Installation temperature: 0 +70°C

C) PACKAGING INFORMATION

Packing in boxes.
Label indicating:
product code, article, quantity, production batch,
FIMO logo and figure.
(Customer code on request).

D) MOUNTING INSTRUCTIONS

On request

SDA M/3					
CODE	ARTICLE	ø D1	ø D2	BOX	WEIGHT
Standard Line					
6125910607	SDA M 1x7+1x7/3	5 - 7	5 - 7	20	82
6125910610	SDA M 1x10+1x10/3	7 - 10	7 - 10	20	82
6125910611	SDA M 1x11+1x11/3	8 - 11	8 - 11	20	82
6125910613	SDA M 1x13+1x13/3	10 - 13	10 - 13	20	82
6125910616	SDA M 1x16+1x16/3	13 - 16	13 - 16	20	82
6125910617	SDA M 1x17+1x17/3	14 - 17	14 - 17	20	82
6125910620	SDA M 1x20+1x20/3	17 - 20	17 - 20	20	82
Hybrid Saddles					
6125910011	SDA M 1x13+1x10/3	10 - 13	7 - 10	20	82
6125910003	SDA M 1x17+1x7/3	14 - 17	5 - 7	20	82
6125910012	SDA M 1x20+1x11/3	17 - 20	8 - 11	20	82

RI	DATE	DR	DATE	AP
02				
01	18/10/18	G.S.	18/10/18	A.V.
	UPGRADE			
00	09/05/2017	E.B.	09/05/2017	A.V.
	1ST EMISSION			

FIMO®
Setting Installation Standards

RoHS

Description:

SDA M / 3

No-tools stackable double saddle + EMP 3.
Fixing of fiber optic and power cables on flats or angular structures : section 3-6 mm.

FI.MO.TEC. S.p.a. reserves the right to modify the technical specifications without prior notice, according to the technical progress
Copyright FI.MO.TEC. S.p.a. All rights reserved.