PRODUCT DATA SHEET

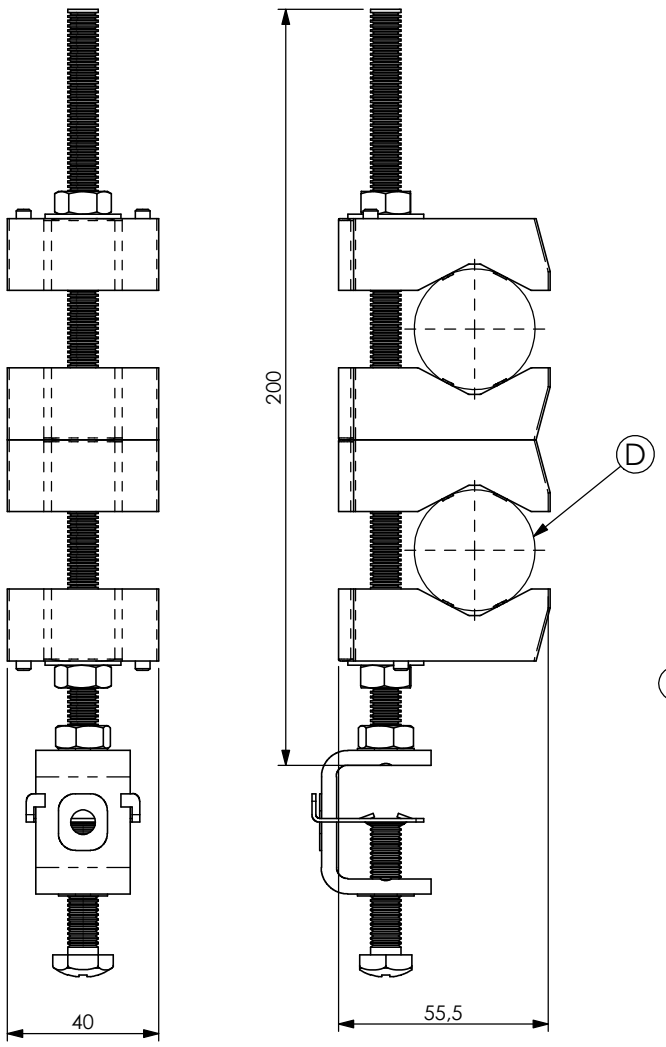

A) SPECIFICATIONS

1 *SAC double saddles made in P.A. 6*
2 *Stainless steel threaded bar BFI M8*
3 *Stainless steel flat Washer RPI 8/16*
4 *Stainless steel hexagonal nut DAI 8*
5 *Stainless steel MIM 8 clamp*
6 *SOX Black P.A. fiberglass saddles*

B) RESISTANCE TESTS

UV Test BS-ISO 105-B06
Vibration test conforming to UNI 60068-2-6
Operating temperature: -50°C +80°C

C) PACKAGING INFORMATION

Packing in boxes.
Label indicating:
product code, article, quantity,
production batch,
FIMO logo and figure.
(Customer code on request).

D) MOUNTING INSTRUCTIONS

On request

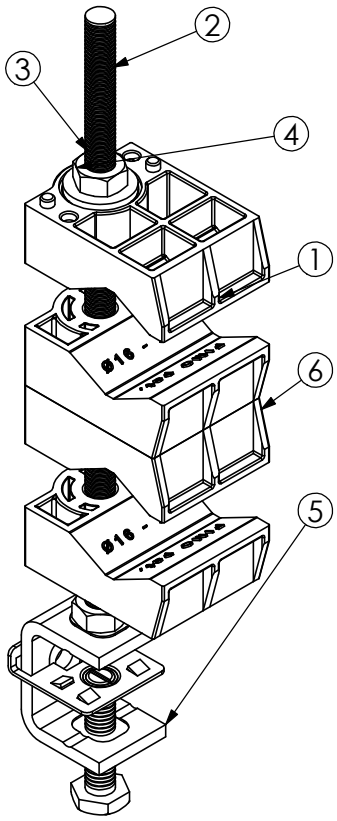

code	**6015720240**
article	UXC/ 2x40

D		
15-40	20	0.2605kg.

RI	DATE	DR	DATE	AP
02				
01				
00	17/09/12	G.S.	17/09/12	A.V.
	1ST EMISSION			

Description:

UXC/ 2x40cable camp + MIM 8

FIMO
SOLUTIONS FOR INSTALLATIONS

RoHS

Use: Fastening of:

2 cables D= 15-40mm

on flats, rounds and angulars

FI.MO.TEC. S.p.a. reserves the right to modify the technical specifications without prior notice, according to the technical progress
Copyright FI.MO.TEC. S.p.a. All rights reserved.