# PRODUCT DATA SHEET

***A) SPECIFICATIONS***

***1*** *Cable clamp. Material: PA6-VO, black colour, self extinguishing, halogen free (according to UL94-VO).*

***B) OPERATING TEMPERATURE***

*Working temperature : -40°C +125°C.*
*Installation temperature : -20°C +60°C.*

***C) DELIVERY MODALITIES***

*Packing in boxes. Label indicating: product code, article, quantity, production batch, FIMO logo and figure. ( Customer code on request ).*

***D) MOUNTING INSTRUCTIONS***

***on request***

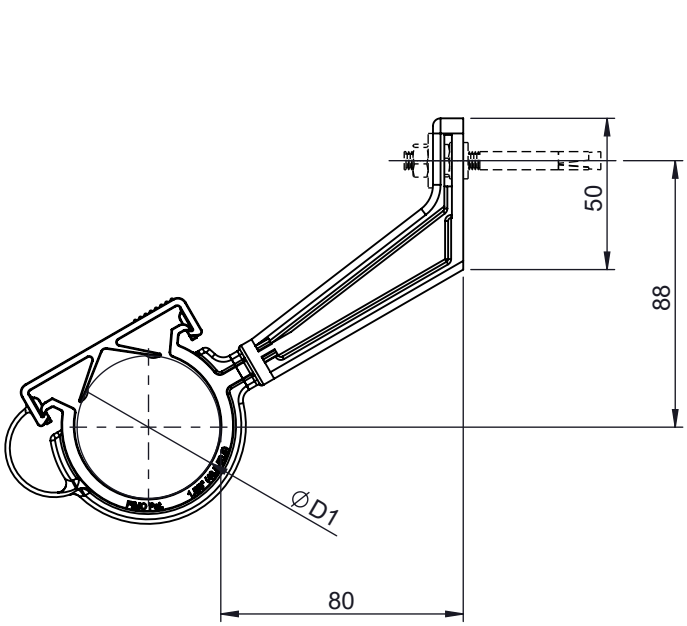


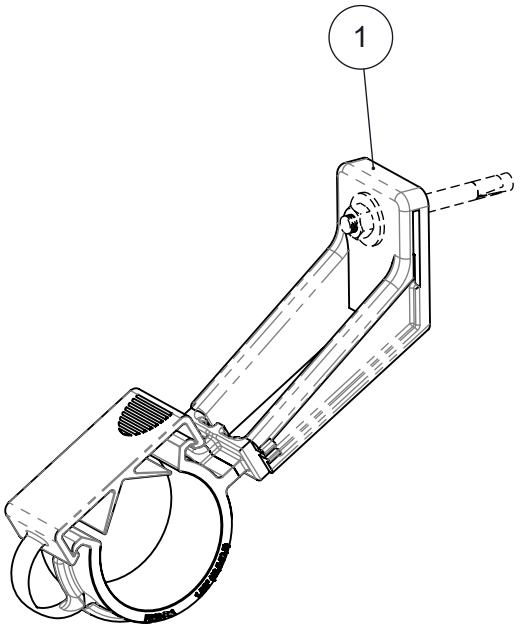


** Suitable for installation in high speed railway tunnel application (400 km/h)*

| REV | DATE | DR | DATE | AP |
|---|---|---|---|---|
| 02 | | | | |
| 01 | | | | |
| 00 | 23/09/26 | E.N. | 23/09/26 | A.V. |
| | 1st EMISSION | | | |

| D1 | D2 | D3 | D4 | D5 | | kg |
|---|---|---|---|---|---|---|
| NR CABLE | | | | | | |
| 1 | | | | | | |
| DIAMETER Ø | | | | | 50 | 0.16 |
| 48.5-50.5 | | | | | | |

**Description and Use:**

RAW LP 1.5/8" - 80 Radiating Cable Clamp

Horizontal or vertical installation of radiating cables in tunnel

Article: RAW LP 1.5/8" - 80

Code: **6180010158**

FIMO

*Building Sustainable Innovation*

RoHS COMPLIANT

FI.MO.TEC. S.p.a. reserves the right to modify the technical specifications without prior notice, according to the technical progress. Copyright FI.MO.TEC. S.p.a. All rights reserved.